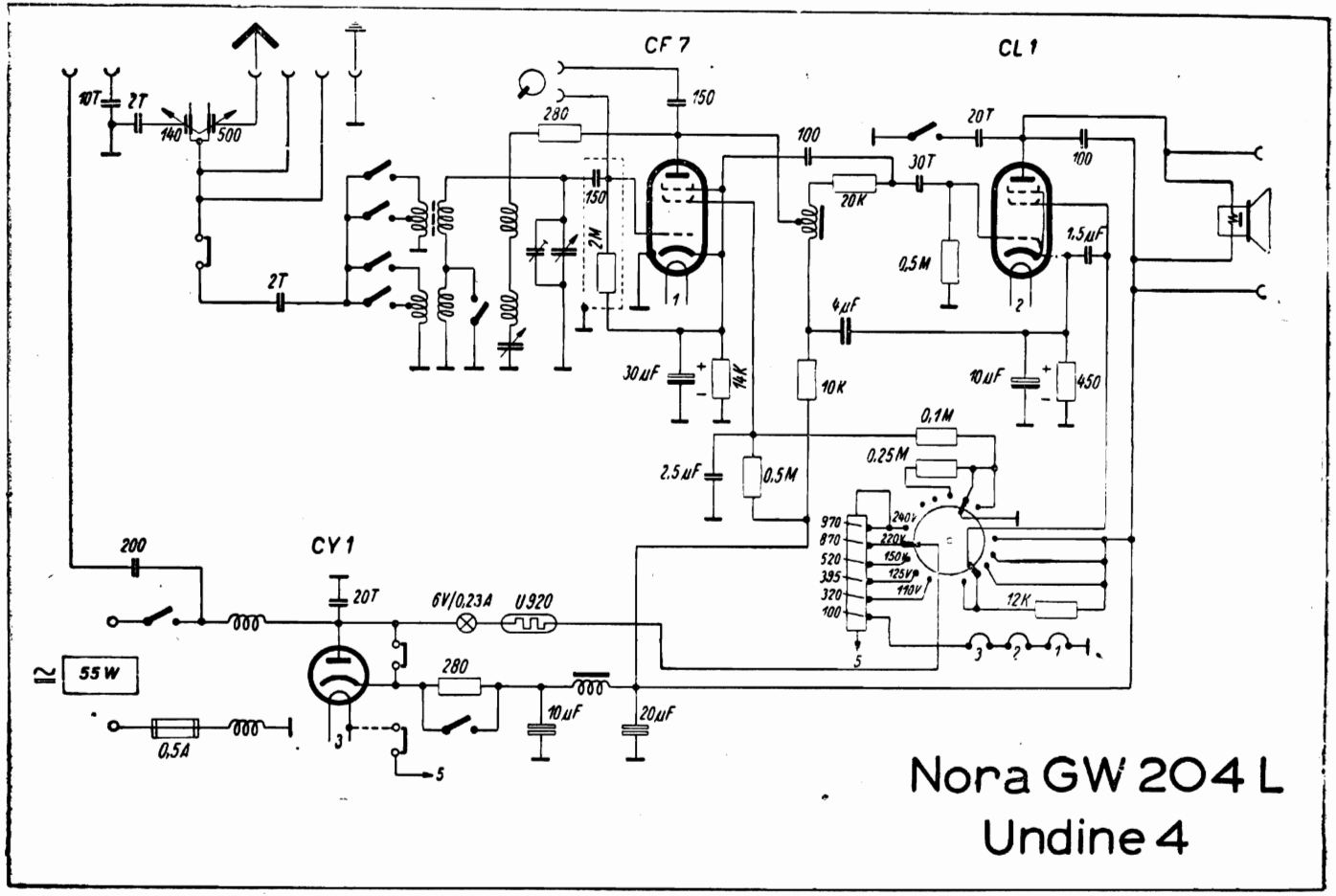

Nora GW 204 L
Undine 4